02-167 Series

From 3.3 µH to 150 µH

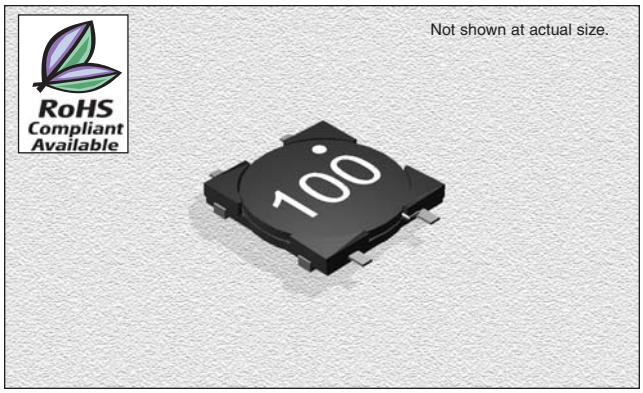

SPECIFICATIONS

Parts are available in ±20% inductance tolerance only.
02-167F Please specify "F" for RoHS Compliant
*Rated Current: Inductance drop = 10% typ.

Part Number	Inductance (µH ±20%)	L Test Freq. (kHz)	DCR Max. (Ω)	Rated Current* Max. (A)
02-167_-3R3M	3.3	100	0.16	0.85
02-167_-4R7M	4.7	100	0.194	0.80
02-167_-6R8M	6.8	100	0.276	0.65
02-167_-100M	10	100	0.335	0.57
02-167_-150M	15	100	0.508	0.45
02-167_-220M	22	100	0.766	0.37
02-167_-330M	33	100	1.162	0.28
02-167_-470M	47	100	1.658	0.22
02-167_-680M	68	100	2.534	0.18
02-167_-101M	100	100	3.8	0.17
02-167_-151M	150	100	5.362	0.13

PHYSICAL DIMENSIONS

Size	A Max.	B Max.	C Max.	D	E	F	G
mm	4.4	5.8	1.45	3.7	3.2	2.9	0.5
inches	0.173	0.228	0.057	0.146	0.126	0.114	0.020

CHARACTERISTICS

Description: SMD power inductor
Applications: Power supplies for VTR, OA equipment, LCD televisions, PC notebooks, portable communication equipment, DC/DC converters, etc.
Operating Temperature: -25°C to +85°C
Inductance Tolerance: ±20%
Testing: Tested on a HP4285A at 100 KHz , 1V
Packaging: Tape & Reel
Rated Current: This indicates the value of current when the inductance is 10% lower than its inital value at D.C. superimposition or D.C. current when at Δt=40°C whichever is lower.
Marking: Parts are marked with inductance code
Miscellaneous: RoHS Compliant
Additional Information: Additional electrical & physical information available upon request

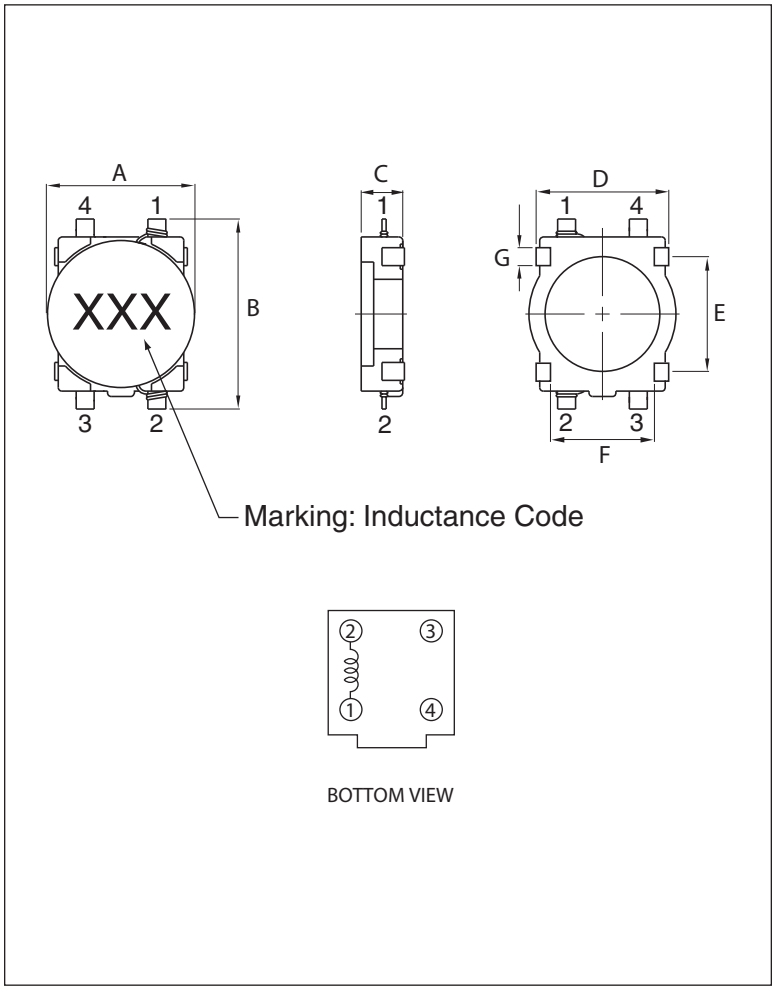

PAD LAYOUT

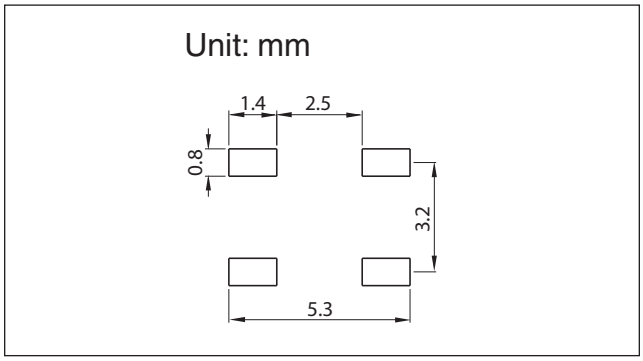

02.13.07

Copyright © 2007 by CT Magnetics, DBA Central Technologies. All rights reserved.
CT Magnetics reserves the right to make improvements or change specifications without notice
CENTRAL TECHNOLOGIES