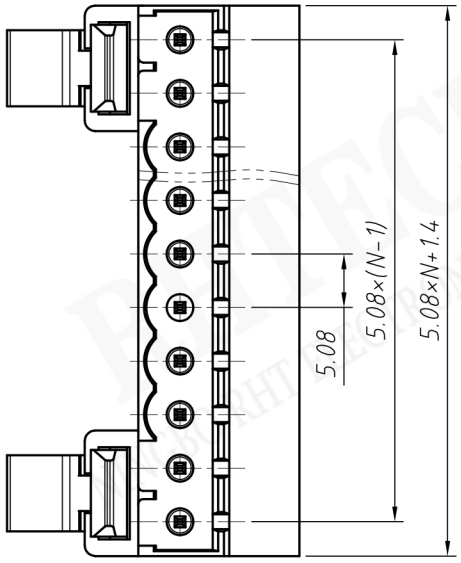

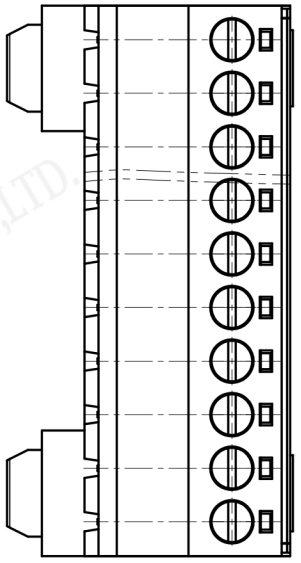

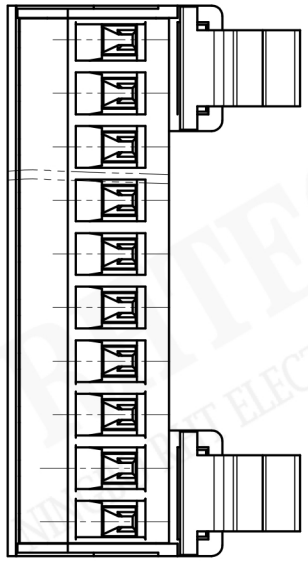

Material	
Housing:	PA66, UL94V-0
Screws:	M3 Steel,Zn plated
Pin header:	Brass,Tin plated
Cage:	Brass,Ni plated
Electrical	
Rated voltage:	300V
Rated current:	15A
Contact Resistance:	20 m Ω
Insulation resistance:	500MΩ/DC500V
Withstand voltage:	AC2000V / 1 min
Wire range:	28-14 AWG 2.5mm ^{2}
Mechanical	
Torque:	0.5Nn(4.5Lb.in)
Steip	Length:7-8mm
Temp. Range:	-40 ° C - + 105 ° C

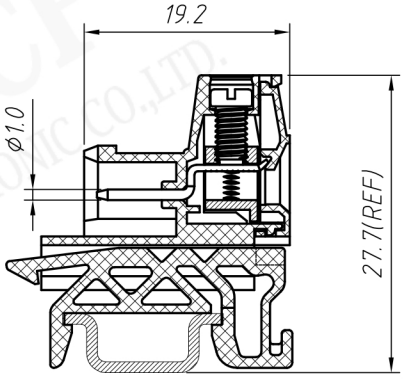

Order Information

RE - C - DGXKM -5.08-XXP-4 S 00

- RoHS
- Terminal Block
- Pitch
- No.: of Pole
- Color: 4- Green
- Screw: S-Slot Screw C-Crass Screw
- Product Code: 00~99

RHTECP NINGBO RHT ELECTRONIC CO.,LTD	UNITS:mm	SHEET SIZE:A4	SCALE: ---	First angle projection
	> 0 ~ 3	> 3 ~ 18	> 18 ~ 50	> 50 ~ 120
	± 0.12	± 0.15	± 0.3	± 0.5
				TERMINAL BLOCK

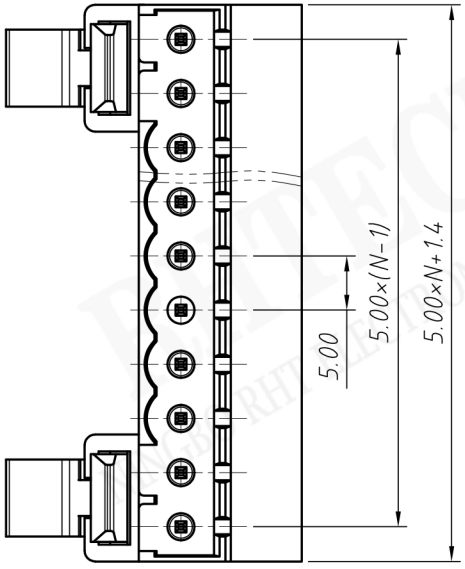

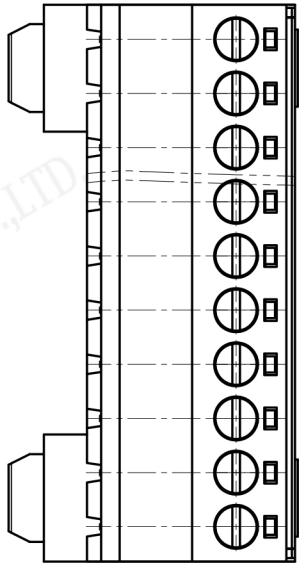

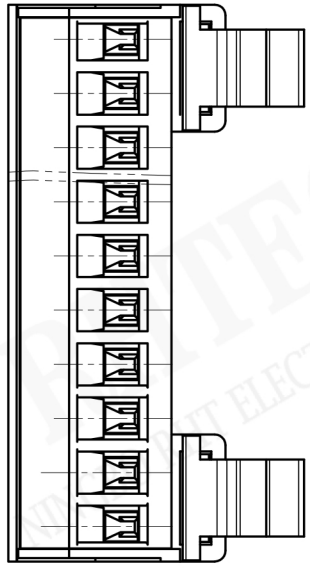

Material	
Housing:	PA66, UL94V-0
Screws:	M3 Steel,Zn plated
Pin header:	Brass,Tin plated
Cage:	Brass,Ni plated
Electrical	
Rated voltage:	300V
Rated current:	15A
Contact Resistance:	20 m Ω
Insulation resistance:	500MΩ/DC500V
Withstand voltage:	AC2000V / 1 min
Wire range:	28-14 AWG 2.5mm ^{2}
Mechanical	
Torque:	0.5Nn(4.5Lb.in)
Steip	Length:7-8mm
Temp. Range:	-40 ° C - + 105 ° C

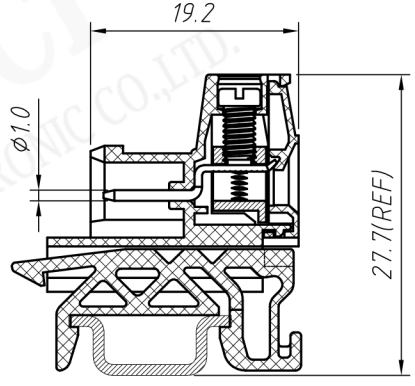

Order Information

RE - C - DGXKM -5.00-XXP-4 S 00

- RoHS
- Terminal Block
- Pitch
- No.: of Pole
- Color: 4- Green
- Screw: S-Slot Screw C-Crass Screw
- Product Code: 00~99

RHTECP NINGBO RHT ELECTRONIC CO.,LTD	UNITS:mm	SHEET SIZE:A4	SCALE: ---	First angle projection
	> 0 ~ 3	> 3 ~ 18	> 18 ~ 50	> 50 ~ 120
	± 0.12	± 0.15	± 0.3	± 0.5
				TERMINAL BLOCK

RHTECP NINGBO RHT ELECTRONIC CO.,LTD.