| REV | CONTENT | CHK | DATE |
|---|---|---|---|
| V0.0 | CONTENT | MYZ | 21.06.28 |

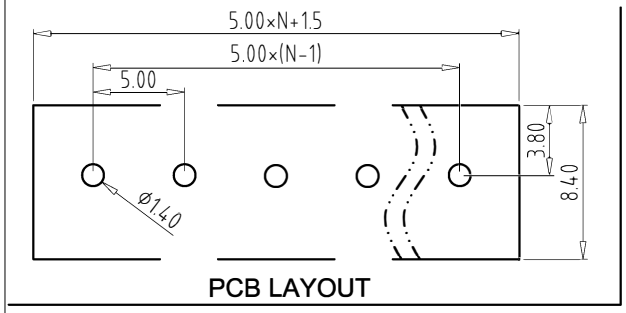

**DEGSON DG166-5.0-07P-1400AH alternative**

Terminal blocks » Screw terminals » With wire protection

METWAY 678TDS02-002 alternative

## Electrical :

| | UL | IEC |
|---|---|---|
| 1.Rated Voltage : | 300V | 250V |
| 2.Rated Current : | 15A | 22A |
| 3.Torque Value : | M3 , 4.43Lb.in | M3 , 0.5N.m |
| 4.Wire Range: | 22-12AWG | 1.0-2.5mm$^2$ |

5.Stripping Length : 6-7mm
6.Withstanding Voltage : AC2000V/1Min.
7.Operating Temperature : -40°C~+105°C
8.RoHS Compliance
9.Safty Approval : c UL us CE
10. "★" is the key quality control point.

GOL166– 5. 0 – XXP – X X – 00
① ② ③ ④ ⑤ ⑥

① Sereies No.

② Pitch

③ Poles
02 02Contacts
03 03Contacts
...
24 24Contacts

④ 1 Single Pitch
2 Double Pitch

⑤ Color: 1 Grey
2 Blue
3 Black
4 Green
5 Orange
6 Red
7 Transparent
8 Yellow
9 White

⑥ Customer Request : 00--Standard

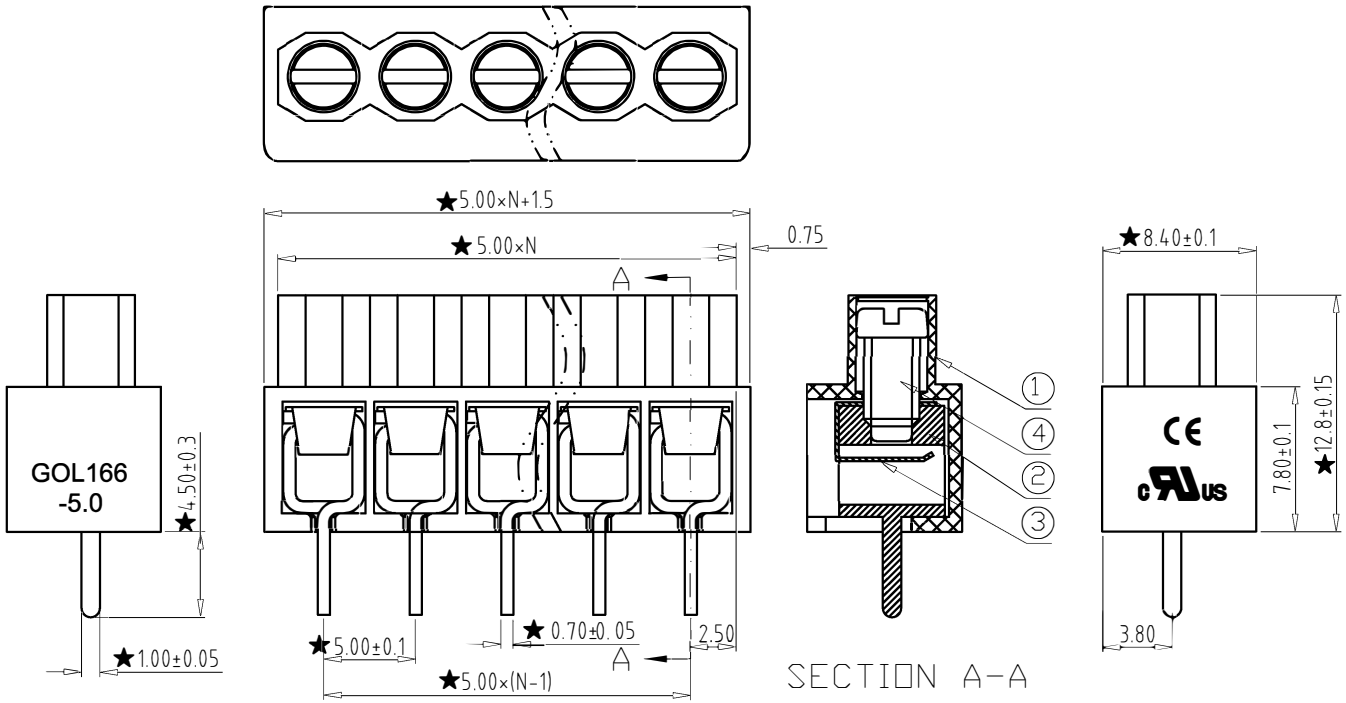


| ITEM | NAME OF PART | NO. OF PART | Q"TY | MATERIAL | NOTE |
|---|---|---|---|---|---|
| 4 | SCREW | XX | N | STEEL | Zn Plated |
| 3 | SHRAPNEL | XX | N | STAINLESS STEEL | -- |
| 2 | PIN HEADER | XX | N | BRASS | Tin Plated |
| 1 | HOUSING | XX | 1 | PA66 UL94V-0 | SEE NOTE |

| | | | | | |
|---|---|---|---|---|---|
| DWG. | MYZ | DATE | 21.06.28 | SIZE | A4 UNITS mm SHEET/OF 1 / 1 |
| CHK. | | DATE | | SCALE | 1:1 |
| APP. | | DATE | | NAME | GOL166-5.0-XXP-XX-OO |
| | | | | DWGNO. | XXXX |

| Total Pitch Tolerances in mm | | | | | | | | | Nominal dimension range in mm | | | | | | | | | ⊥ | | ⌭ | — | | // |
|---|---|---|---|---|---|---|---|---|---|---|---|---|---|---|---|---|---|---|---|---|---|---|---|
| over 0 to 30 | over 30 to 53 | over 53 to 70 | over 70 to 90 | over 90 to 115 | over 115 to 150 | over 150 to 250 | over 250 to 350 | over 350 to 500 | over 0 to 30 | over 30 to 53 | over 53 to 70 | over 70 to 90 | over 90 to 115 | over 115 to 150 | over 150 to 200 | over 200 to 250 | over 250 to 320 | over 0 to 10 | over 10 | all | over 0 to 100 | over 100 to 150 | over 150 |
| ±0.18 | ±0.20 | ±0.25 | ±0.3 | ±0.35 | ±0.44 | ±0.60 | ±0.70 | ±0.85 | ±0.20 | ±0.25 | ±0.30 | ±0.35 | ±0.44 | ±0.55 | ±0.70 | ±0.80 | ±0.90 | 0.2 | 0.3 | 0.3 | 0.2 | 0.3 | 0.5 |

BEC DISTRIBUTION LTD