Revision:	Revision Note:	ECN#:	Date
Original	-	-	26 Nov. 2025

Physical Dimensions (Unit: mm)

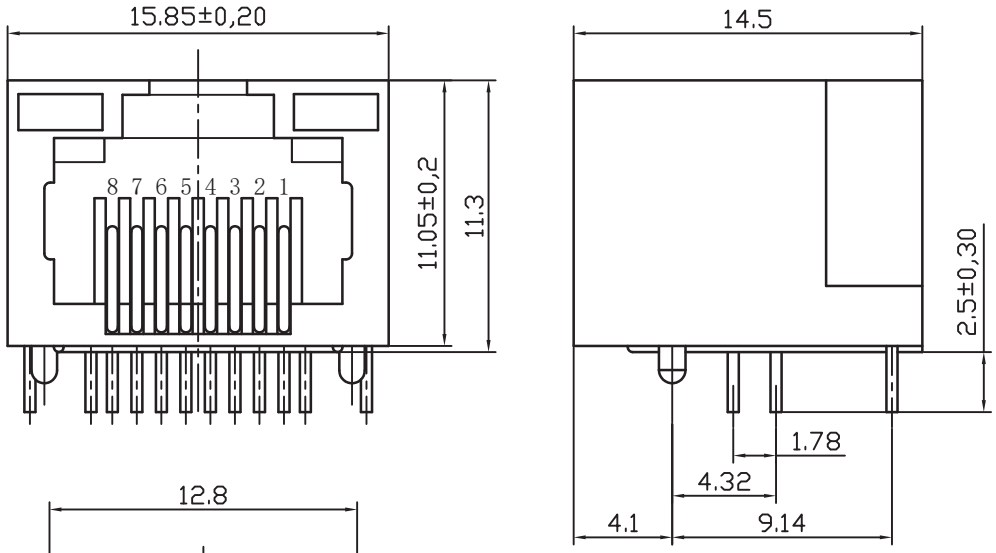

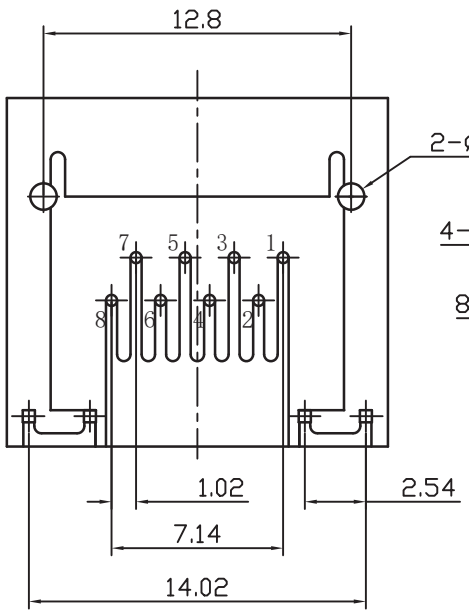

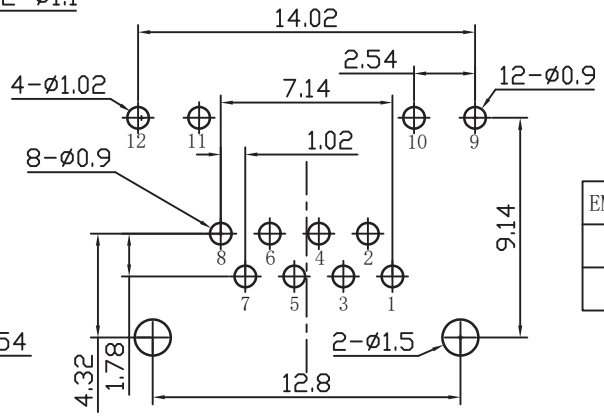

RECOMMENDED PCB LAYOUT(TOP VIEW)

Electrical

Voltage Rating: 125V AC
Current Raing: 1.5A
Contact Resistance: 50 mΩ Max.
Insulation Resistance: 500 MΩ Min. @ 500V DC
Dielectric Strength: 1000V AC 50Hz 1min.

Mechanical

Housing Material: Glass filled polyester (LCP Black UL94V-0)
Contact Material: Phosphor Bronze (Round Pin ø0.46mm)
Contact Plating: Gold Flash over Nickel
Operating Life: 750 cycles min.

Environmental

Storage: -40ºC to +85ºC
Operation: -40ºC to +85ºC
Wave Solder Tip Temperature and Time: 250ºC, 5 sec

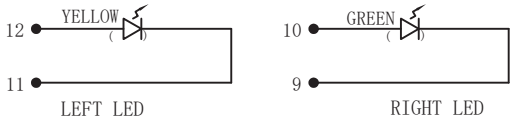

EMITTING COLOR	λ p(nm)	VF @IF=20mA	IR @VR=5V
GREEN	565	1.8~2.1V	10 μA max
YELLOW	585	1.8~2.1V	10 μA max

X.X	±0.30
X.XX	±0.25
X.XXX	±0.15
Angles	±1º

RoHS Compliant

Date: 26 Nov. 2025	Scale: None	Reference:	
Title: RJ45 1x1 Connector Without Shield			
CENTRAL TECHNOLOGIES www.ctparts.com		Filename:	
		Part Number: 02-03-8651F	Revision: Original	Sheet: 1 of 1